"CS-DLX" CARBOY SHELF DELUXE

Stainless Steel wall shelf with wrap around, XP rails, rack assembly, and mounting brackets

Features

- 42"l x 12"w x 1"t
- Constructed from 18 gauge, type 304 stainless steel, polished to a #4 finish
- S/S wrap 4" tall welded to shelf
- XP-rails welded to underside
- Racking system with hardware (HB-'W', CB-'W', screws)
- Standard widths of 12" or 16"
- Also available in custom widths
- *OPTION* (select from below) S/S mounting brackets

Product Dimensions

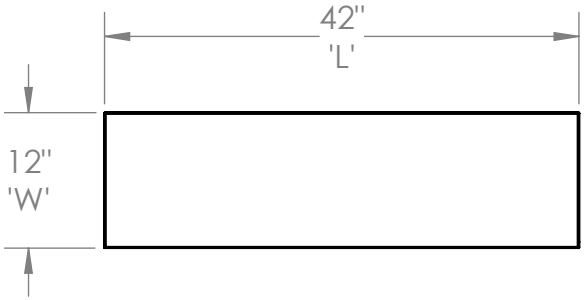

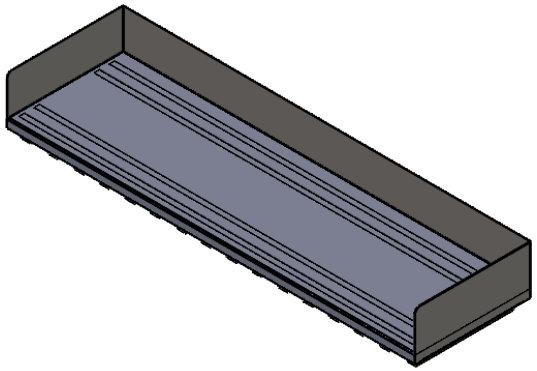

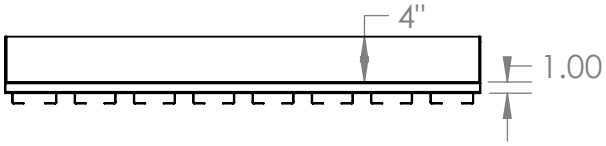

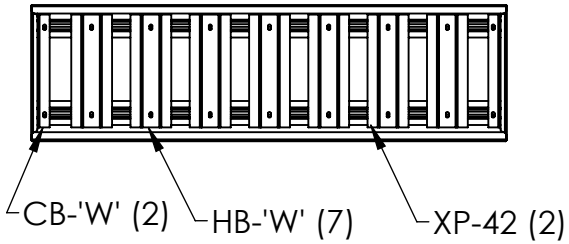

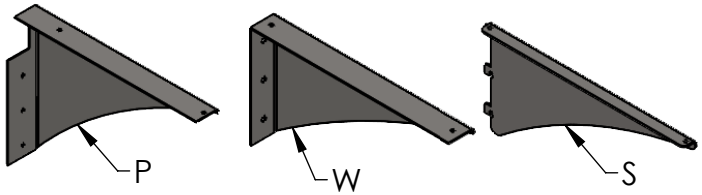

NAME - DLX (CS-'L'-MOUNT-'W')	TYPE OF BRKT
CS-42-P-'W'-DLX	PEGBOARD MOUNT
CS-42-W-'W' - DLX	WALL MOUNT
CS-42-S-'W' - DLX	ADJ WALL MOUNT (REQUIRES WALL STANDARDS)

UNLESS OTHERWISE SPECIFIED:
DIMENSIONS ARE IN INCHES
TOLERANCES:
ANGULAR ±2.50°
ONE-PLACE ±0.5
TWO-PLACE ±0.13

PROPRIETARY AND CONFIDENTIAL
THE INFORMATION CONTAINED IN THIS DRAWING IS THE SOLE PROPERTY OF INTER DYNE SYSTEMS. ANY REPRODUCTION IN PART OR AS A WHOLE WITHOUT THE WRITTEN PERMISSION OF INTER DYNE SYSTEMS IS PROHIBITED.

REV.	REVISION DESCRIPTION	DRAWN	CHECKED	DATE
A	STANDARD PRINT CREATED	ASR		10/01/20

COMMENTS:

QTY: N/A

INTER DYNE
SYSTEMS, INC
676 E. Ellis Rd., Norton Shores, MI 49441
Phone: 231-799-8760 Fax: 231-799-9690

PART NO.
CS-4212-DLX

MATERIAL: **18GA**
FINISH: **304 #4**