"DB" DISCOVERY BRACKET

WALL SHELF BRACKET FOR DISCOVERY POST

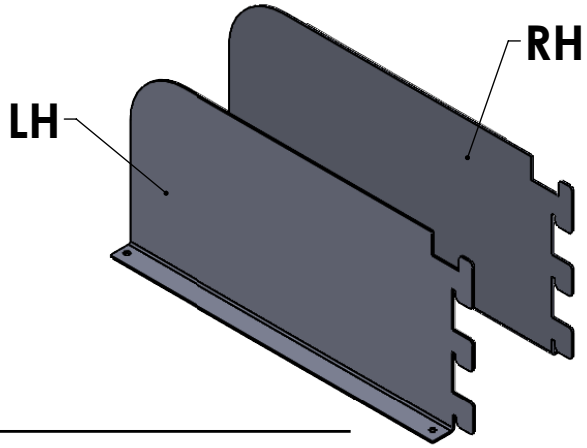

Features

- Can be Stainless or Painted
- 16 gauge construction
- Custom sizes available upon request

MODEL # (Standard Sizes)

- DB-12 (PAINTED)
- DBS-12 (STAINLESS)
- DS-16
- DBS-16

Product Dimensions

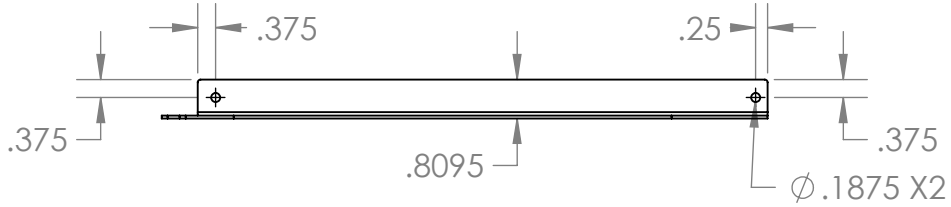

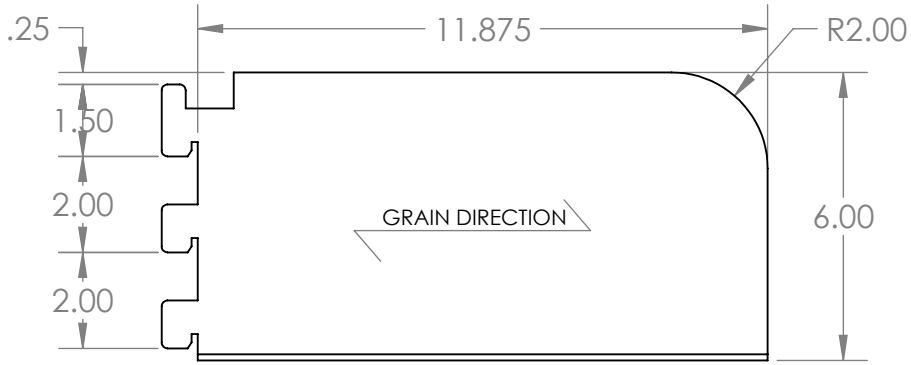

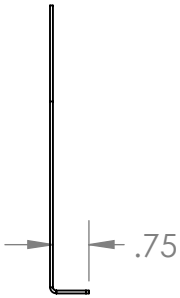

UNLESS OTHERWISE SPECIFIED:

DIMENSIONS ARE IN INCHES
TOLERANCES:
ANGULAR ±2.50°
ONE-PLACE ±0.5
TWO-PLACE ±0.13

PROPRIETARY AND CONFIDENTIAL
THE INFORMATION CONTAINED IN THIS DRAWING IS THE SOLE PROPERTY OF INTER DYNE SYSTEMS. ANY REPRODUCTION IN PART OR AS A WHOLE WITHOUT THE WRITTEN PERMISSION OF INTER DYNE SYSTEMS IS PROHIBITED.

REV.	REVISION DESCRIPTION	DRAWN	CHECKED	DATE
A	SUBMITTALS SENT	JJF		--/--/--

COMMENTS:

QTY: N/A

INTER DYNE
SYSTEMS, INC
676 E. Ellis Rd., Norton Shores, MI 49441
Phone: 231-799-8760 Fax: 231-799-9690

PART NO.

DBS-12 - SET

MATERIAL: 16GA

FINISH: 304 #4