| PART NUMBER | LENGTH | WIDTH |
|---|---|---|
| HDT-18-2 | 18" | 2" |
| HDT-18-4 | 18" | 4" |
| HDT-20-2 | 20" | 2" |
| HDT-20-4 | 20" | 4" |
| HDT-24-2 | 24" | 2" |
| HDT-24-4 | 24" | 4" |
| HDT-30-2 | 30" | 2" |
| HDT-30-4 | 30" | 4" |
| HDT-32-2 | 32" | 2" |
| HDT-32-4 | 32" | 4" |
| HDT-36-2 | 36" | 2" |
| HDT-36-4 | 36" | 4" |
| HDT-42-2 | 42" | 2" |
| HDT-42-4 | 42" | 4" |
| HDT-48-2 | 48" | 2" |
| HDT-48-4 | 48" | 4" |
| HDT-60-2 | 60" | 2" |
| HDT-60-4 | 60" | 4" |

## *"HDT" Under Mount Drip Trough*

Drip trough that attaches to the bottom of Acrylic and Epoxy Pegboards.

## *Features*

- All stainless steel construction
- Made from 20 Gauge material, Type 304 #4 finish
- .75" Mounting flange
- 1" Deep trough
- 3ft Flexible drain hose included

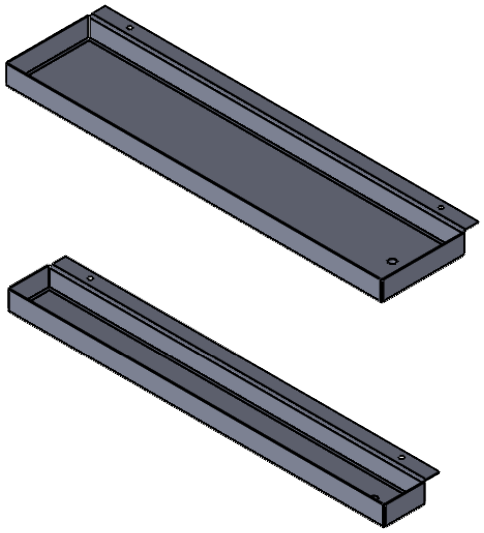

## *Product Dimensions*

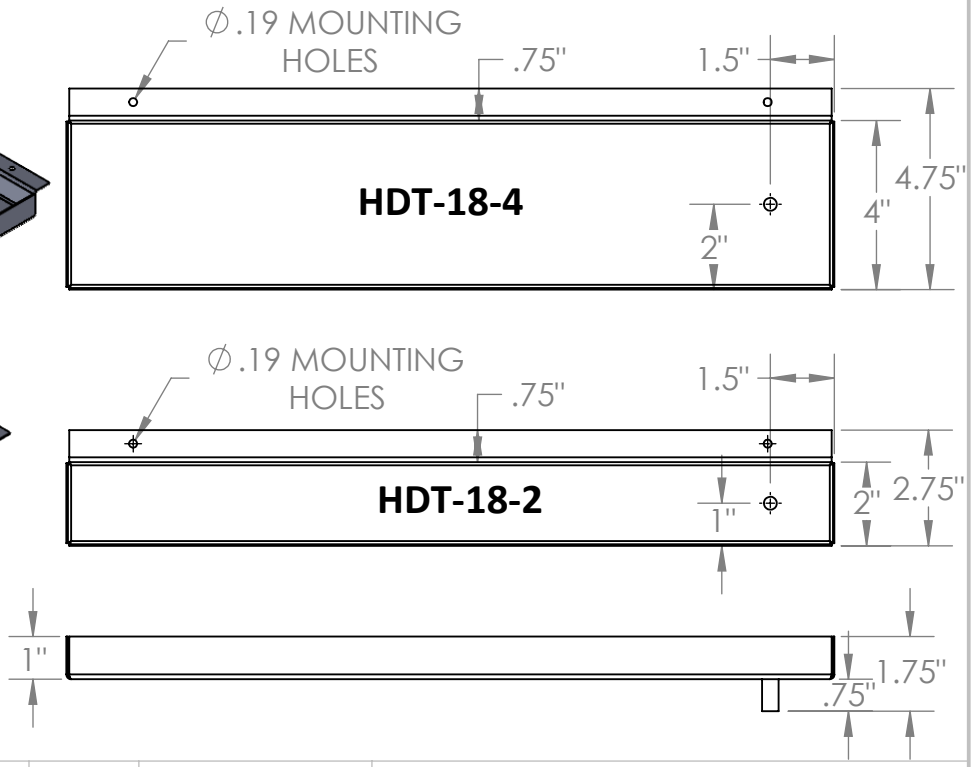


**UNLESS OTHERWISE SPECIFIED:**
DIMENSIONS ARE IN INCHES
TOLERANCES:
ANGULAR ±2.50°
ONE-PLACE ±0.5
TWO-PLACE ±0.13

**PROPRIETARY AND CONFIDENTIAL**
THE INFORMATION CONTAINED IN THIS DRAWING IS THE SOLE PROPERTY OF INTER DYNE SYSTEMS. ANY REPRODUCTION IN PART OR AS A WHOLE WITHOUT THE WRITTEN PERMISSION OF INTER DYNE SYSTEMS IS PROHIBITED.

| REV. | REVISION DESCRIPTION | DRAWN | CHECKED | DATE |
|---|---|---|---|---|
| A | STANDARD PRINT CREATED | ASR | | 09/28/20 |

COMMENTS:

**QTY: N/A**

INTER DYNE
SYSTEMS, INC
676 E. Ellis Rd., Norton Shores, MI 49441
Phone: 231-799-8760 Fax: 231-799-9690

**PART NO.**
HDT-STANDARDS

MATERIAL: **20GA** FINISH: **304 #4**