# PRODUCT DIMENSIONS

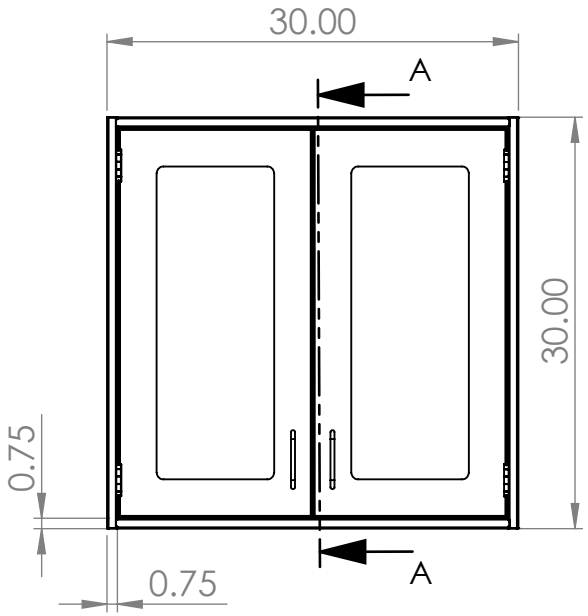


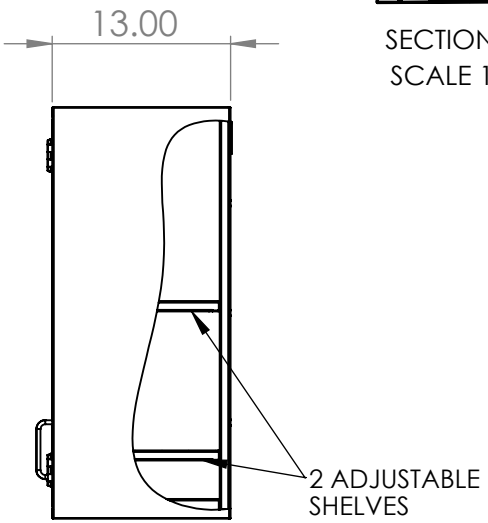


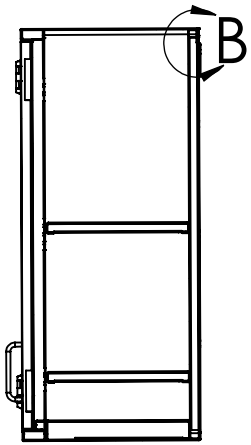


SECTION A-A
SCALE 1 : 14

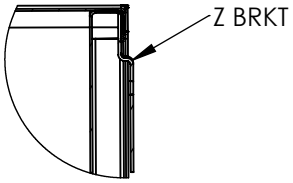


DETAIL B
SCALE 1 : 4

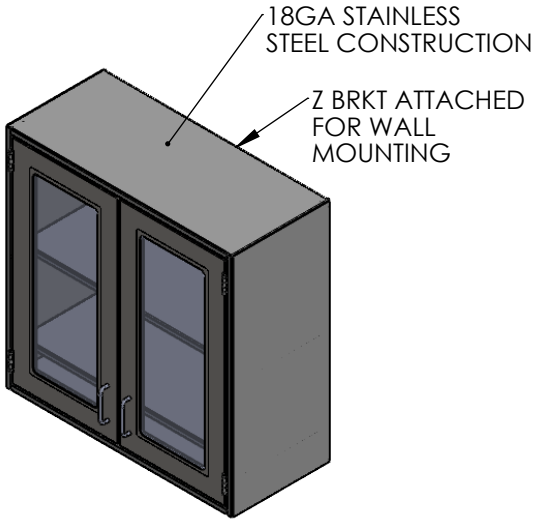


SCALE 1 : 18

**UNLESS OTHERWISE SPECIFIED:**
DIMENSIONS ARE IN INCHES
TOLERANCES:
ANGULAR ±2.50°
ONE-PLACE ±0.5
TWO-PLACE ±0.13

**PROPRIETARY AND CONFIDENTIAL**
THE INFORMATION CONTAINED IN THIS DRAWING IS THE SOLE PROPERTY OF INTER DYNE SYSTEMS. ANY REPRODUCTION IN PART OR AS A WHOLE WITHOUT THE WRITTEN PERMISSION OF INTER DYNE SYSTEMS IS PROHIBITED.

| REV. | REVISION DESCRIPTION | DRAWN | CHECKED | DATE |
|---|---|---|---|---|
| A | SUBMITTALS SENT | ASR | | --/--/-- |

COMMENTS:

**QTY: N/A**

INTER DYNE
SYSTEMS, INC
676 E. Ellis Rd., Norton Shores, MI 49441
Phone: 231-799-8760 Fax: 231-799-9690

**PART NO.**
SWC3030-GD

MATERIAL: **18GA**
FINISH: **304 #4**