CABINET COMES WITH ONE ADJUSTABLE SHELF

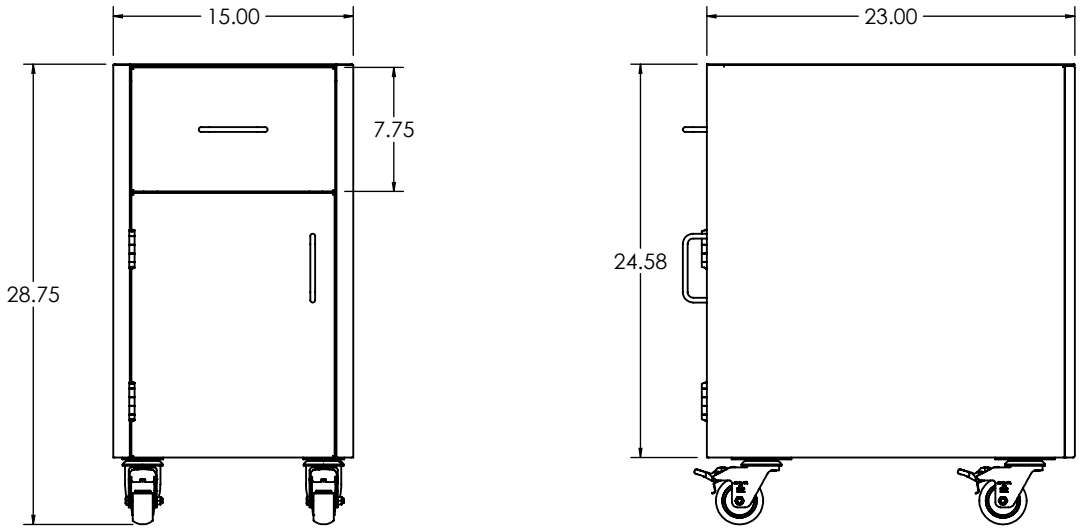

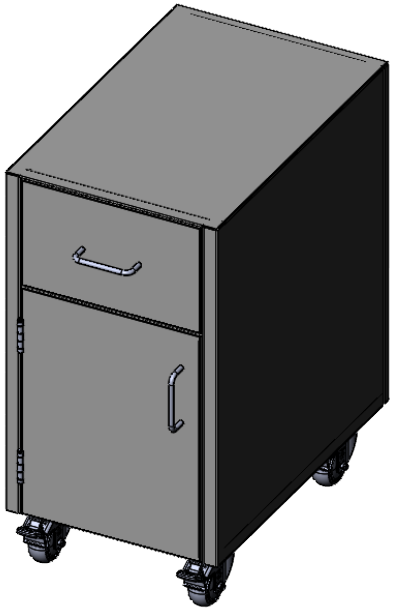

UNLESS OTHERWISE SPECIFIED:

DIMENSIONS ARE IN INCHES
TOLERANCES:
ANGULAR ±1.0°
ONE-PLACE ±0.060
TWO-PLACE ±0.030
THREE-PLACE ±0.015

PROPRIETARY AND CONFIDENTIAL
THE INFORMATION CONTAINED IN THIS DRAWING IS THE SOLE PROPERTY OF INTER DYNE SYSTEMS. ANY REPRODUCTION IN PART OR AS A WHOLE WITHOUT THE WRITTEN PERMISSION OF INTER DYNE SYSTEMS IS PROHIBITED.

REV.	REVISION DESCRIPTION	DRAWN	CHECKED	DATE
A	NEW	SJA		12/12/23

COMMENTS:

QTY:

INTER DYNE
SYSTEMS, INC
676 E. Ellis Rd., Norton Shores, MI 49441
Phone: 231-799-8760 Fax: 231-799-9690

PART NO. SMC2915-A-LH

DESCRIPTION MOBILE CAB. "A" 29 X 15

MATERIAL: 304 SS

FINISH: #4