CABINET COMES WITH ONE ADJUSTABLE SHELF

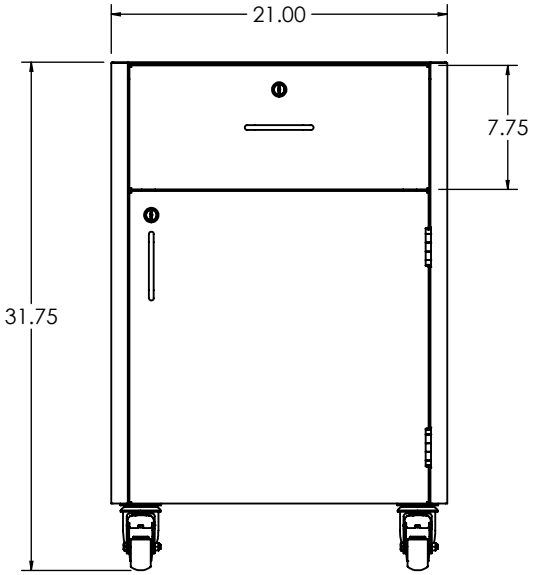


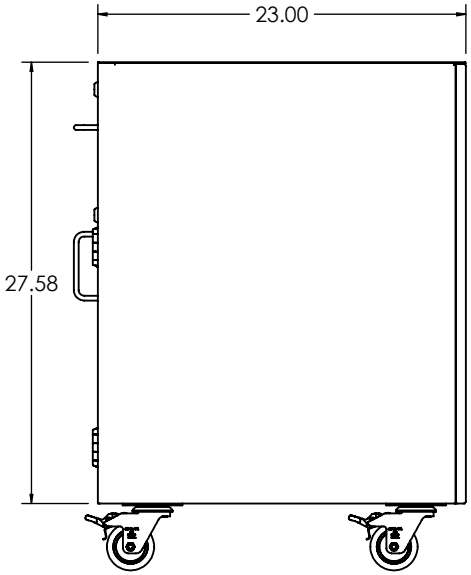


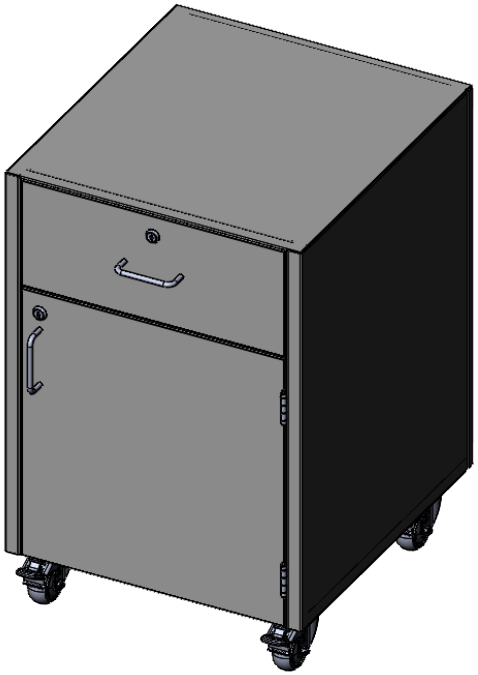

**UNLESS OTHERWISE SPECIFIED:**

DIMENSIONS ARE IN INCHES
TOLERANCES:
ANGULAR ±1.0°
ONE-PLACE ±0.060
TWO-PLACE ±0.030
THREE-PLACE ±0.015

**PROPRIETARY AND CONFIDENTIAL**
THE INFORMATION CONTAINED IN THIS DRAWING IS THE SOLE PROPERTY OF INTER DYNE SYSTEMS. ANY REPRODUCTION IN PART OR AS A WHOLE WITHOUT THE WRITTEN PERMISSION OF INTER DYNE SYSTEMS IS PROHIBITED.

| REV. | REVISION DESCRIPTION | DRAWN | CHECKED | DATE |
|---|---|---|---|---|
| A | NEW | SJA | | 12/14/23 |

COMMENTS:

**QTY:**

INTER DYNE
SYSTEMS, INC
676 E. Ellis Rd., Norton Shores, MI 49441
Phone: 231-799-8760 Fax: 231-799-9690

**PART NO.** SMC3221-A-RH-LK

**DESCRIPTION** MOBILE CAB. "A" 32 X 21

MATERIAL: 304 SS

FINISH: #4