PRODUCT DIMENSIONS

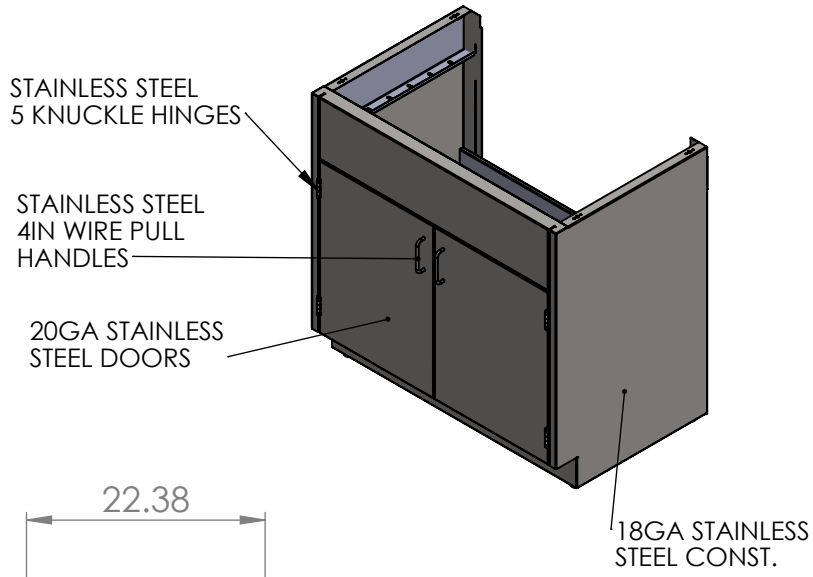

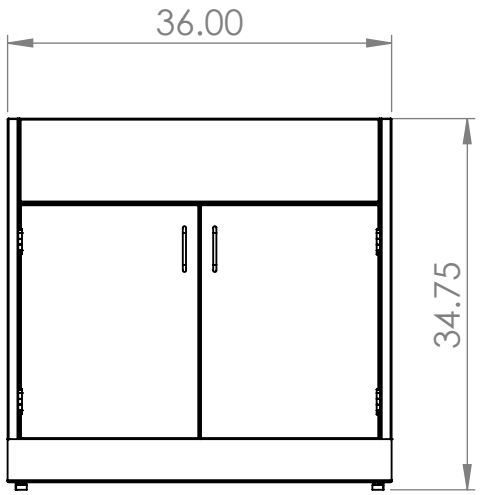

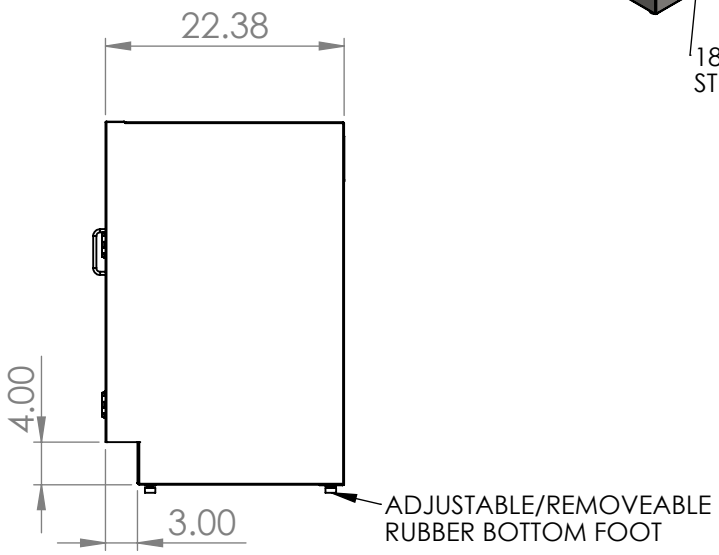

UNLESS OTHERWISE SPECIFIED:

DIMENSIONS ARE IN INCHES
TOLERANCES:

ANGULAR	±2.50°
ONE-PLACE	±0.5
TWO-PLACE	±0.13

PROPRIETARY AND CONFIDENTIAL
THE INFORMATION CONTAINED IN THIS DRAWING IS THE SOLE PROPERTY OF INTER DYNE SYSTEMS. ANY REPRODUCTION IN PART OR AS A WHOLE WITHOUT THE WRITTEN PERMISSION OF INTER DYNE SYSTEMS IS PROHIBITED.

REV.	REVISION DESCRIPTION	DRAWN	CHECKED	DATE
A	SUBMITTALS SENT	ASR		--/--/--

COMMENTS:

QTY: N/A

INTER DYNE
SYSTEMS, INC
676 E. Ellis Rd., Norton Shores, MI 49441
Phone: 231-799-8760 Fax: 231-799-9690

PART NO.
SBC3536-SK

MATERIAL: **18GA**
FINISH: **304 #4**