# PRODUCT DIMENSIONS

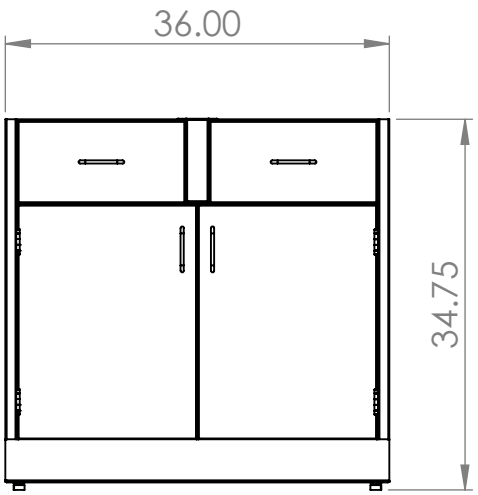


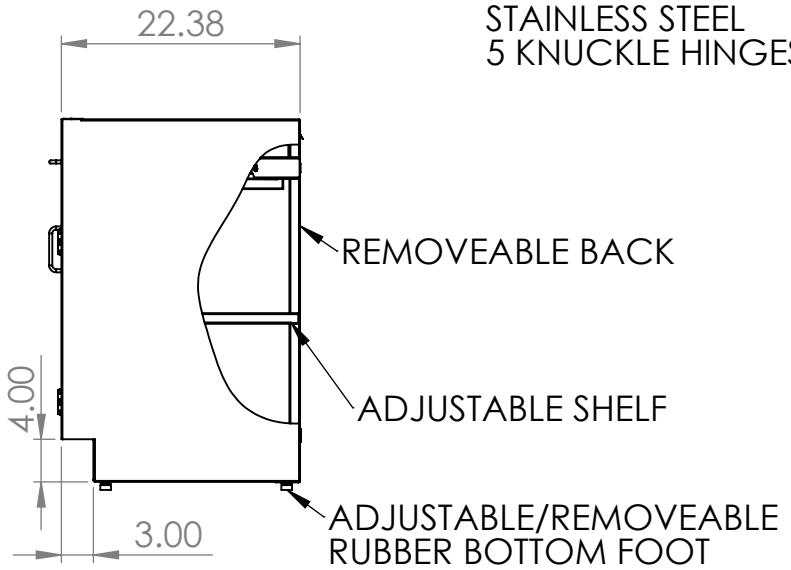


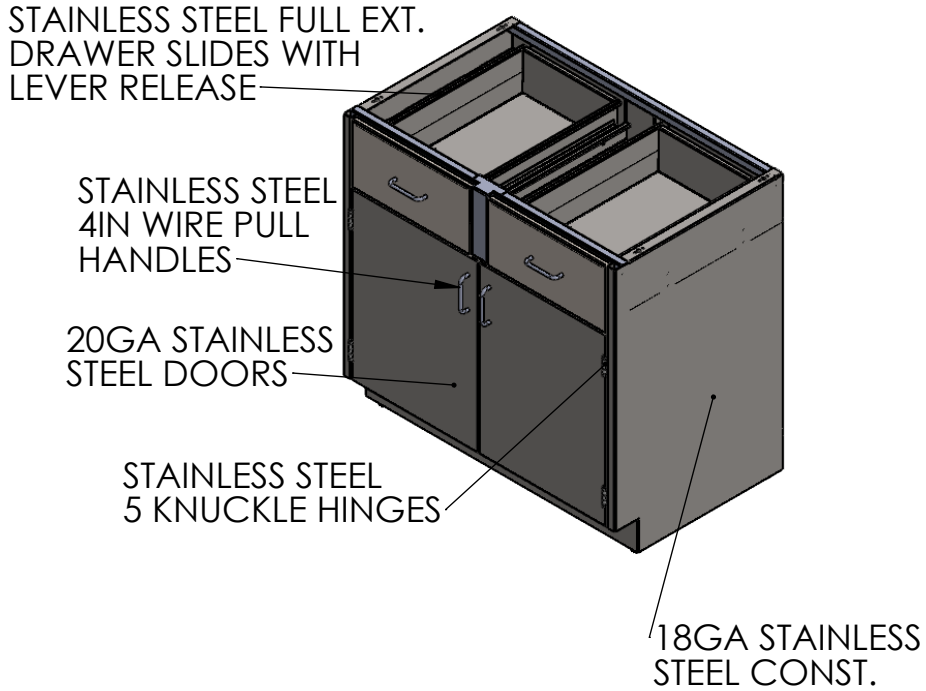


**UNLESS OTHERWISE SPECIFIED:**

DIMENSIONS ARE IN INCHES
TOLERANCES:

| | |
|---|---|
| ANGULAR | ±2.50° |
| ONE-PLACE | ±0.5 |
| TWO-PLACE | ±0.13 |

**PROPRIETARY AND CONFIDENTIAL**

THE INFORMATION CONTAINED IN THIS DRAWING IS THE SOLE PROPERTY OF INTER DYNE SYSTEMS. ANY REPRODUCTION IN PART OR AS A WHOLE WITHOUT THE WRITTEN PERMISSION OF INTER DYNE SYSTEMS IS PROHIBITED.

| REV. | REVISION DESCRIPTION | DRAWN | CHECKED | DATE |
|---|---|---|---|---|
| A | SUBMITTALS SENT | ASR | | --/--/-- |

COMMENTS:

**QTY: N/A**

INTER DYNE
SYSTEMS, INC
676 E. Ellis Rd., Norton Shores, MI 49441
Phone: 231-799-8760 Fax: 231-799-9690

**PART NO.**

SBC3536-A

MATERIAL: **18GA**

FINISH: **304 #4**