PRODUCT DIMENSIONS

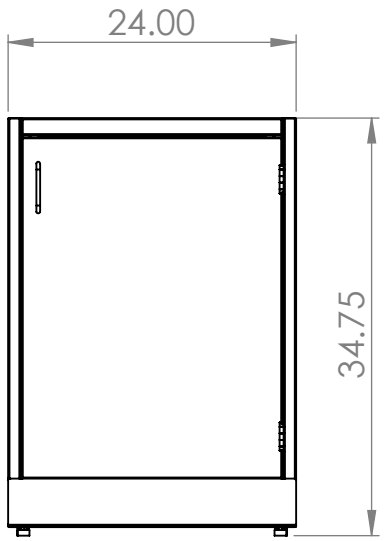

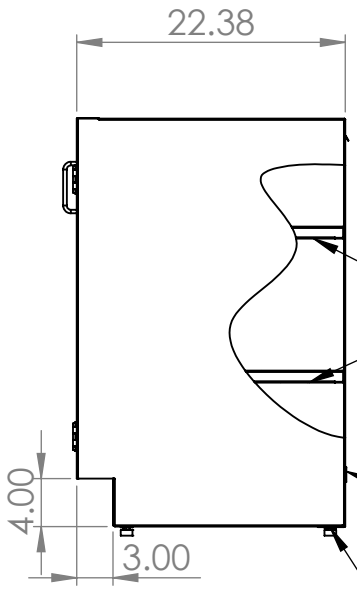

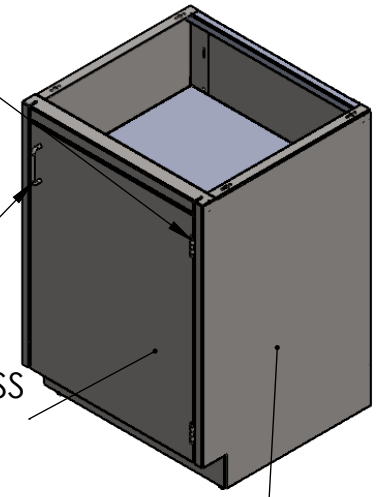

STAINLESS STEEL
5 KNUCKLE HINGES

STAINLESS STEEL
4IN WIRE PULL
HANDLES

20GA STAINLESS
STEEL DOORS

18GA STAINLESS
STEEL CONST.

2 ADJUSTABLE
SHELVES

REMOVEABLE BACK

ADJUSTABLE/REMOVEABLE
RUBBER BOTTOM FOOT

UNLESS OTHERWISE SPECIFIED:

DIMENSIONS ARE IN INCHES
TOLERANCES:
ANGULAR ±2.50°
ONE-PLACE ±0.5
TWO-PLACE ±0.13

PROPRIETARY AND CONFIDENTIAL
THE INFORMATION CONTAINED IN THIS DRAWING IS THE SOLE PROPERTY OF INTER DYNE SYSTEMS. ANY REPRODUCTION IN PART OR AS A WHOLE WITHOUT THE WRITTEN PERMISSION OF INTER DYNE SYSTEMS IS PROHIBITED.

REV.	REVISION DESCRIPTION	DRAWN	CHECKED	DATE
A	SUBMITTALS SENT	ASR		--/--/--

COMMENTS:

QTY: N/A

INTER DYNE
SYSTEMS, INC
676 E. Ellis Rd., Norton Shores, MI 49441
Phone: 231-799-8760 Fax: 231-799-9690

PART NO.
SBC3524-RH

MATERIAL: 18GA
FINISH: 304 #4