COMES WITH TWO ADJUSTABLE SHELVES

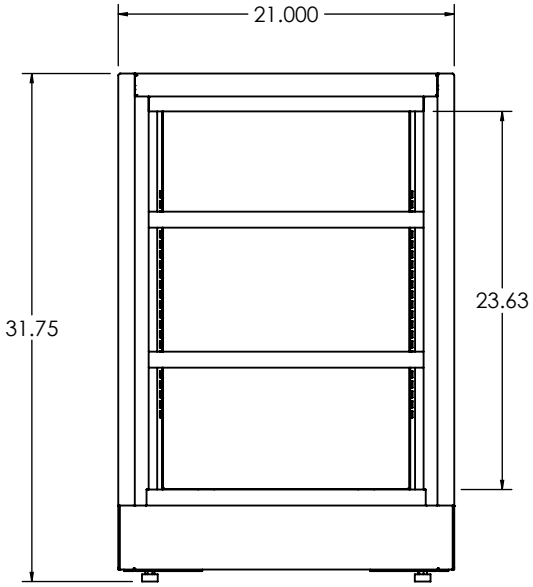

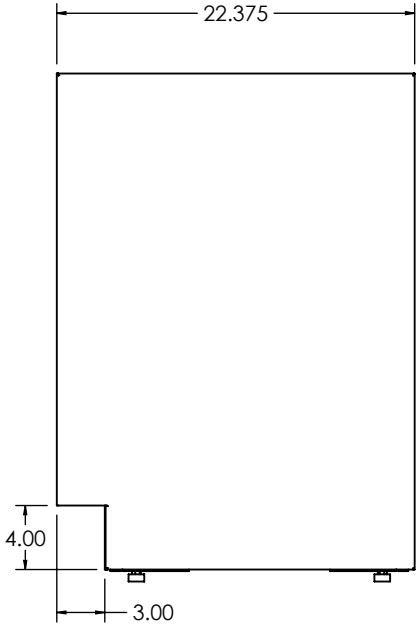

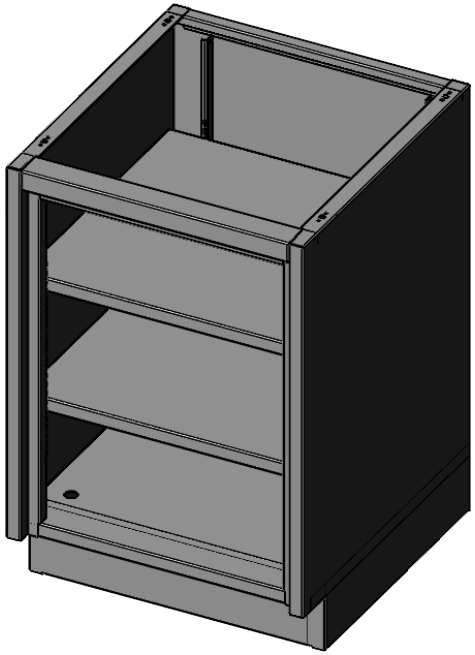

UNLESS OTHERWISE SPECIFIED:

DIMENSIONS ARE IN INCHES
TOLERANCES:

ANGULAR	±1.0°
ONE-PLACE	±0.060
TWO-PLACE	±0.030
THREE-PLACE	±0.015

PROPRIETARY AND CONFIDENTIAL

THE INFORMATION CONTAINED IN THIS DRAWING IS THE SOLE PROPERTY OF INTER DYNE SYSTEMS. ANY REPRODUCTION IN PART OR AS A WHOLE WITHOUT THE WRITTEN PERMISSION OF INTER DYNE SYSTEMS IS PROHIBITED.

REV.	REVISION DESCRIPTION	DRAWN	CHECKED	DATE
A	NEW	SJA		3/06/24

COMMENTS:

QTY:

INTER DYNE
SYSTEMS, INC
676 E. Ellis Rd., Norton Shores, MI 49441
Phone: 231-799-8760 Fax: 231-799-9690

PART NO. SBC3221-OF

DESCRIPTION BASE CAB. OF 32 X 21

MATERIAL: 304 SS

FINISH: #4