"ICH" Island Canopy Hood

STAINLESS STEEL ISLAND CANOPY HOOD

"ICH" Island Canopy Hood

- "A" L X 30"W X 18"H
- CONSTRUCTED FROM 16 GA, TYPE 304 STAINLESS STEEL, POLISHED TO A #4 FINISH
- 8" ROUND EXHAUST COLLAR
- 4 - ROD BRACKETS

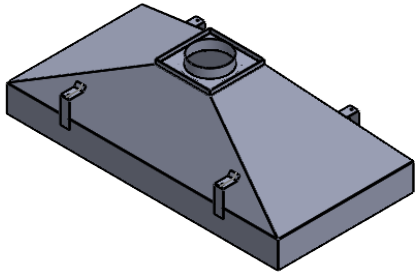

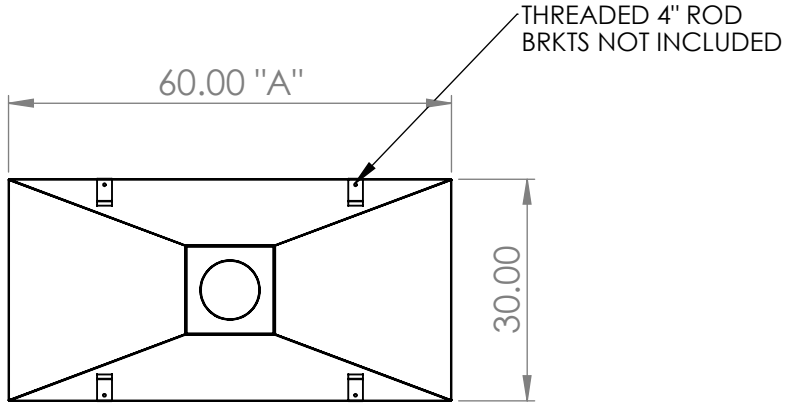

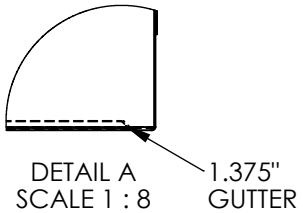

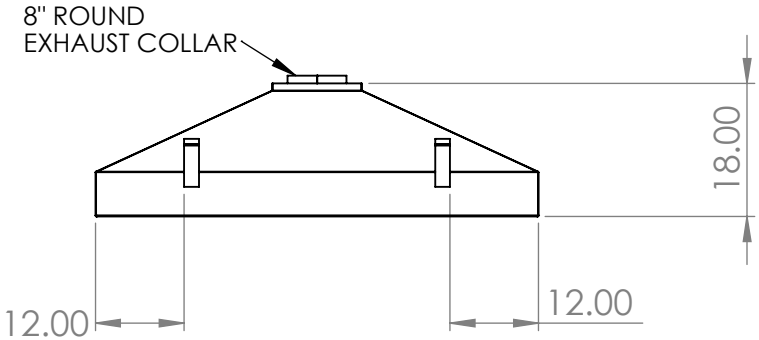

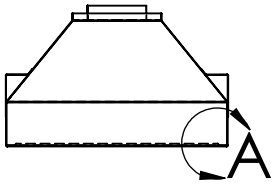

UNLESS OTHERWISE SPECIFIED:

DIMENSIONS ARE IN INCHES
TOLERANCES:
ANGULAR ±2.50°
ONE-PLACE ±0.5
TWO-PLACE ±0.13

PROPRIETARY AND CONFIDENTIAL

THE INFORMATION CONTAINED IN THIS DRAWING IS THE SOLE PROPERTY OF INTER DYNE SYSTEMS. ANY REPRODUCTION IN PART OR AS A WHOLE WITHOUT THE WRITTEN PERMISSION OF INTER DYNE SYSTEMS IS PROHIBITED.

REV.	REVISION DESCRIPTION	DRAWN	CHECKED	DATE
A	SUBMITTALS SENT	ASR		--/--/--

COMMENTS:

QTY: N/A

INTER DYNE
SYSTEMS, INC
676 E. Ellis Rd., Norton Shores, MI 49441
Phone: 231-799-8760 Fax: 231-799-9690

PART NO.

ICH-6030-18

MATERIAL: **16GA**

FINISH: **304 #4**