"FSA" Free Standing Assembly Brackets

Brackets used for mounting Acrylic or Epoxy free standing boards.

Features

- 23"h x 8"w x 2"t
- Constructed from .25" thick Steel
- Painted matte black

Product Dimensions

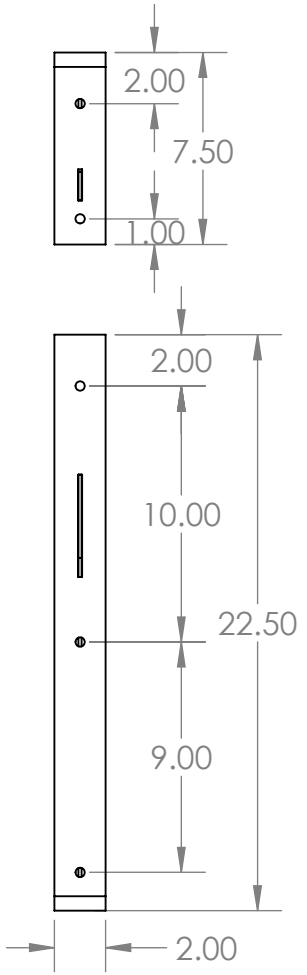

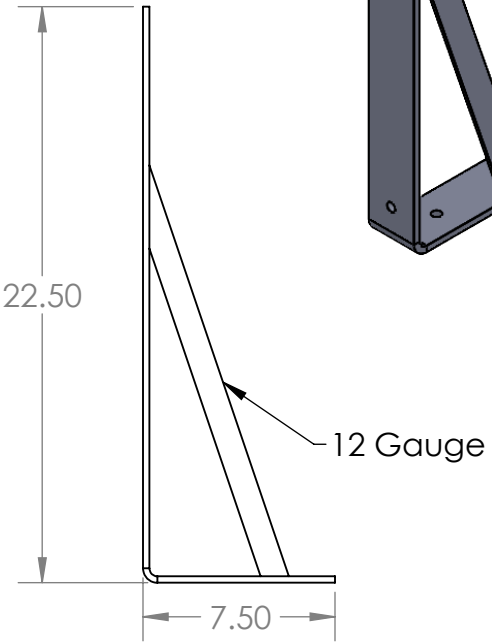

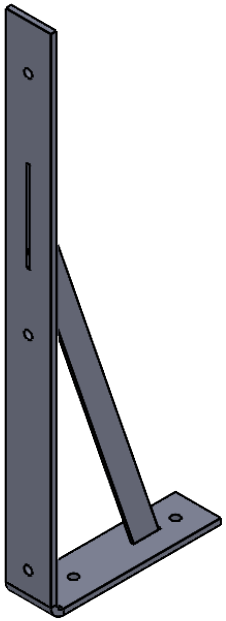

UNLESS OTHERWISE SPECIFIED:
DIMENSIONS ARE IN INCHES
TOLERANCES:
ANGULAR ±2.50°
ONE-PLACE ±0.5
TWO-PLACE ±0.13

PROPRIETARY AND CONFIDENTIAL
THE INFORMATION CONTAINED IN THIS DRAWING IS THE SOLE PROPERTY OF INTER DYNE SYSTEMS. ANY REPRODUCTION IN PART OR AS A WHOLE WITHOUT THE WRITTEN PERMISSION OF INTER DYNE SYSTEMS IS PROHIBITED.

REV.	REVISION DESCRIPTION	DRAWN	CHECKED	DATE
A	STANDARD PRINT CREATED	ASR		10/27/20

COMMENTS:

QTY: N/A

INTER DYNE
SYSTEMS, INC
676 E. Ellis Rd., Norton Shores, MI 49441
Phone: 231-799-8760 Fax: 231-799-9690

PART NO.
FSA

MATERIAL: .25IN
FINISH: 304 #4